ATH-Ex

Explosion-protected surface-mounting Thermostat for potentially explosive gas atmospheres Zone 1 and potentially explosive dust atmospheres Zone 21

(shown with cover removed)

B 605041.0

Operating Instructions

JUMO

2012-10-19/00347683

☞ Please read these Operating Instructions before commissioning the instrument. Keep the manual in a place that is accessible to all users at all times. Please assist us to improve these operating instructions, where necessary. Your suggestions will be appreciated.

Phone +49 661 6003-0
Fax +49 661 6003-607

☞ All necessary settings and, where appropriate, alterations inside the instrument are described in these operating instructions. If any difficulties should still arise during commissioning, you are asked not to carry out any unauthorized manipulations on the unit. You could endanger your rights under the instrument warranty! Please contact the nearest subsidiary or the head office in such a case.

Contents

Page

1 Introduction ... 4

1.1 Typographical conventions ... 4
1.1.1 Warning signs ... 4
1.1.2 Note signs ... 4

1.2 Application ... 5

1.3 Marking ... 5

1.4 Safety notes ... 5

2 Instrument identification ... 6

2.1 Nameplate ... 6

2.2 Type designation ... 6

3 Mounting ... 7

3.1 Dimensions ... 7

3.2 Opening the surface-mounting thermostat ... 8

3.3 Securing the surface-mounting thermostat ... 8

3.4 Capillary / temperature probe / pocket ... 8
3.4.1 General ... 8
3.4.2 Approved probes and protection tubes (pockets) ... 9

3.5 Permissible operating conditions at the pocket ... 10
3.5.1 Probe mountings 20, 22 and 23 ... 10
3.5.2 Probe mountings 10, 21, 60, 65 ... 13

3.6 Mounting the probe ... 13

4 Installation ... 14

4.1 Regulations and notes ... 14

4.2 Electrical connection ... 15

4.3 Connection diagrams ... 15

5 Settings ... 16

5.1 Limit setting ... 16

5.2 Self-monitoring ... 16
5.2.1 Response to a fracture in the measuring system ... 16
5.2.2 Response to low temperature ... 16

6 Instrument description ... 17

6.1 Technical data ... 17

7 Appendix ... 20

1 Introduction

1.1 Typographical conventions

1.1.1 Warning signs

Danger

This sign is used when there may be **injury to personnel** if the instructions are ignored or not followed correctly!

Caution

This sign is used when there may be **damage to equipment** if the instructions are ignored or not followed correctly!

1.1.2 Note signs

Note

This sign is used when your **special attention** is drawn to a remark.

Reference

This sign refers to **further information** in other chapters or sections.

abc[1]

Footnote

Footnotes are remarks that **refer to specific points** in the text. Footnotes consist of two parts:

A marker in the text and in the footnote text.

The markers in the text are arranged as continuous superscript numbers.

The footnote text (in smaller typeface) is placed at the bottom of the page and starts with a superscript number.

∗

Action

This sign indicates that an **action to be performed** is described.

The individual steps are marked by this asterisk, e. g.

∗ Select setpoint

1.2 Application

Depending on the version, the explosion-protected surface-mounting thermostat, type ATH-Ex, can be used as

- TW temperature monitor
- STW fail-safe temperature monitor

in areas with an explosion hazard caused by gases, vapors or mists, Zone 1, or in areas with combustible dust or dust/air mixtures, Zone 21.

If this surface-mounting thermostat is used inside the hazardous area, the relevant regulations for mounting and operating equipment in such an area must be observed.

Cutting through or kinking the capillary of surface-mounting thermostat, type ATH-Ex, will result in permanent instrument failure!

1.3 Marking

Ex **II 2G Ex ed IIC T6** for potentially explosive gas atmospheres

Ex **II 2D Ex tD A21 IP65 T80°C** for potentially explosive dust atmospheres

Test certificate: PTB 03 ATEX 1167

CE marking and No. of notified body: CE 0044.

1.4 Safety notes

Filling liquid may escape in the event of a measuring system fracture. At present there is no restrictive statement from the health authorities concerning any danger to health over short periods and at low concentrations, e.g. after a fracture of the measuring system.

Physical and toxicological properties of the substances that may escape in the event of a system fracture:

End of scale °C	Dangerous reaction	Fire/explosion hazard		Water contamination	Toxicological data		
		Ignition temp. °C	Explosion limit % v/v		irritant	danger to health	toxic
< +200	–	+355	0.6 — 8	X	X	X	–
≥ +200 ≤ +350	–	+490	– –	X	X	X	–
> +350 ≤ +500	–	–	–	–	–	–	–

– = no; X = yes

2 Instrument identification

2.1 Nameplate

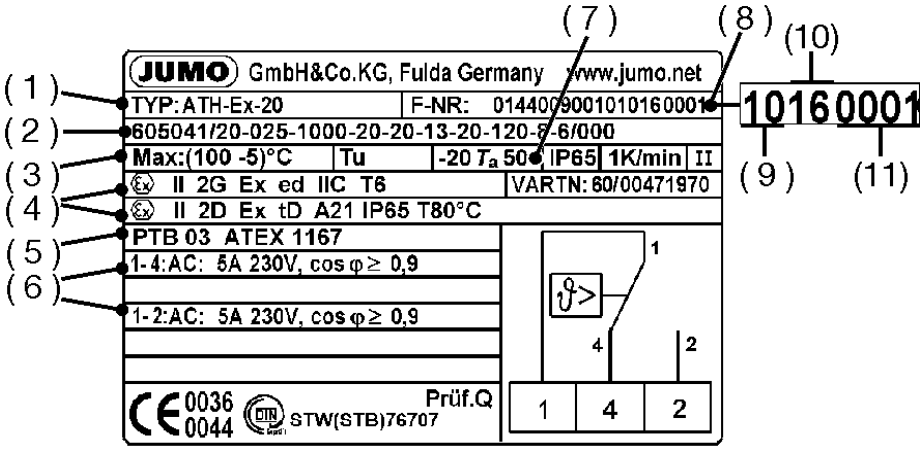

(1) Type ⑨ Chapter 2.2 “Type designation”, page 6

(2) Type code

(3) Control range or limiting value range / ambient temperature at which this thermostat has been calibrated (option)

(4) Ex-marking

(5) Testing laboratory / Test certificate

(6) Breaking capacicty

(7) Permissible ambient temperature

(8) Fabrication number

(9) Date of manufacture

(10 Week of manufacture

(11) Device number

2.2 Type designation

ATH-Ex-. .

ATH surface-mounting thermostat (with capillary)

Ex marking for explosion-protected version

. . code number for the function:

2 = temperature monitor **(TW)**
with changeover contact.
Limit adjustable within the housing.

20 = fail-safe temperature monitor **(STW)**
with changeover contact.
Limit adjustable within the housing.

3.1 Dimensions

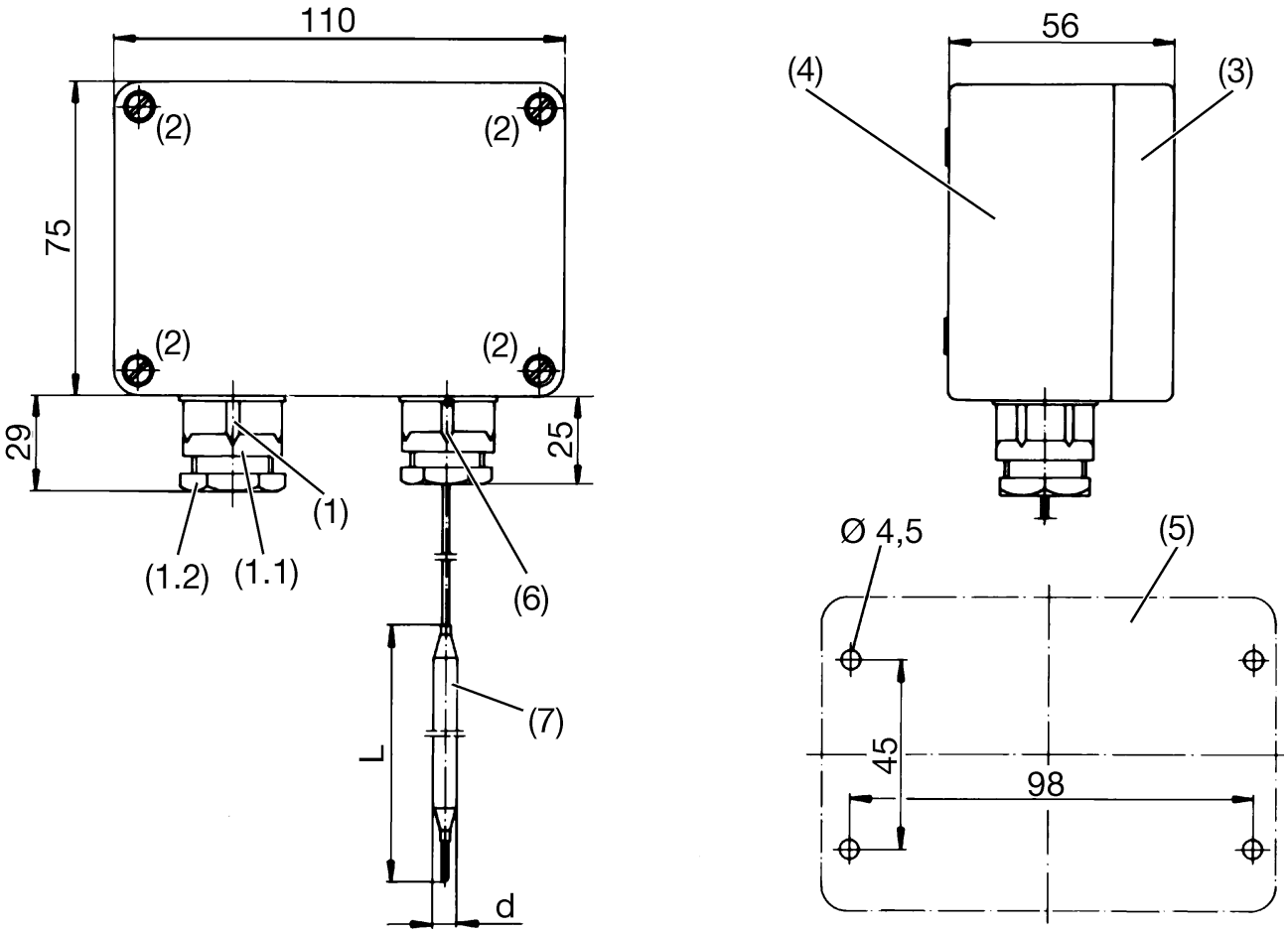

(1)	Ex cable gland M 20 x 1.5 x 6-12		
(1.1)	Screw-in thread.	Tightening torque:	3.75 Nm
(1.2)	Compression screw.	Tightening torque:	for cable dia. 6 mm = 3.5 Nm
		Tightening torque:	for cable dia. 12 mm = 2.5 Nm
(2)	Cover screws (2 are lead-sealable)		
(3)	Cover		
(4)	Housing bottom		
(5)	Drilling diagram		
(6)	Ex cable gland for sealing the capillary exit		
(7)	Temperature probe		

3.2 Opening the surface-mounting thermostat

✱ Unscrew the 4 cover screws (2)

✱ Remove cover (3) with seal (not visible)

Make sure that the seal is seated correctly when reassembling!

3.3 Securing the surface-mounting thermostat

Mounting position

to DIN 16257, NL 0 — NL 90 (other NL on request)

✱ Drill fixing holes according to the drilling diagram.

✱ Use the 4 screws to secure the housing bottom.

3.4 Capillary / temperature probe / pocket

3.4.1 General

Cutting through or kinking the capillary of the surface-mounting thermostats will result in permanent failure of the instrument!

Minimum permissible bending radius of the capillary is 5 mm.

The temperature probe must be installed in a JUMO pocket, otherwise the approval of the thermostat becomes invalid.

The temperature probe must completely immersed in the medium to be measured.

To ensure their overall accuracy of response, the thermostats must only be used together with the pockets supplied by the factory (diameter D=8, 10 or 15 mm).

Pockets with diameter D=10 mm may only be fitted with probes with diameter d=8 mm.

Only 2 or 3 probes may be fitted into a common pocket (probe mounting “10”, diameter d=6 mm), and only pockets 15 x 0.75 mm may be used. When fitting 2 probes into a common pocket, the factory-supplied spring clip must be fitted in the pocket.

For operation in air, probe mounting “10” (without pocket) must be chosen.

3.4.2 Approved probes and protection tubes (pockets)

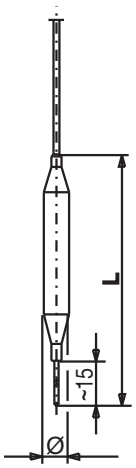

10
Plain cylindrical probe

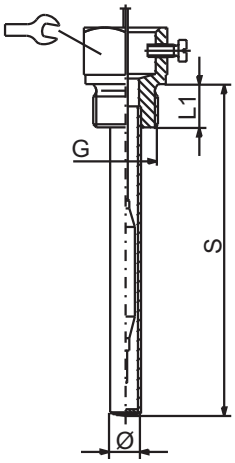

20
Screw-in pocket with screw-in spigot, Form A
to DIN 3852/2.
With fixing screw.

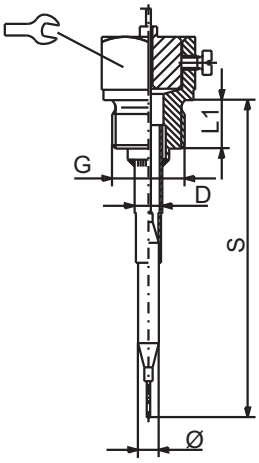

21
Screw-in pocket, open at end, with screw-in spigot Form A to DIN 3852/2.
With fixing screw and clip.

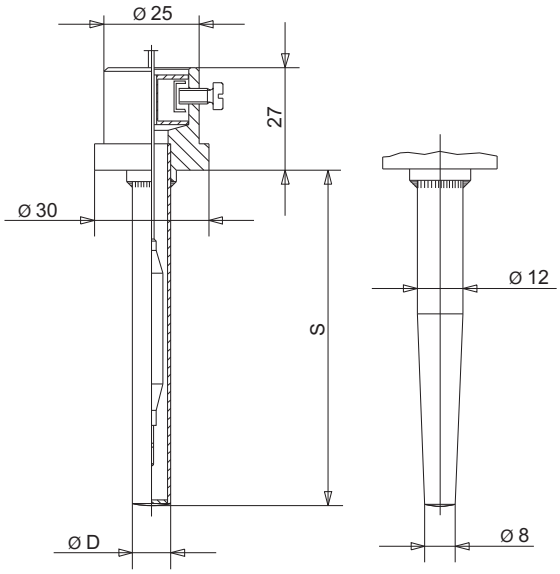

22
Weld-in pocket with fixing screw and clip.

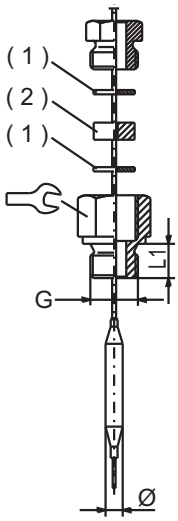

60
Threaded at both ends, for retrofitting.
Oil-resistant seal.
For temperatures up to +200°C.

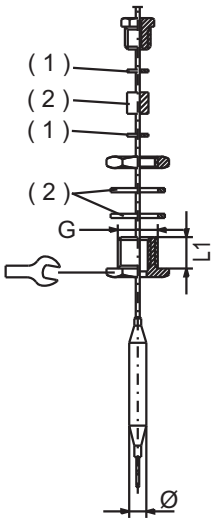

(1) washer
(2) seal

65
Sealing gland for retrofitting.
Oil-resistant seal.
For temperatures up to +200°C.

3.5 Permissible operating conditions at the pocket

3.5.1 Probe mountings 20, 22 and 23

The values given below refer to the maximum loading on the probe mounting concerned. The maximum pressure that can be sealed depends on the mounting conditions and may possibly be lower.

3.5.1.1 Steel pockets (22 and 23)

Material

Tube: St 35.8 I
Weld-in nipple: 16 Mo 3 (no turned groove)

Loading

Temperature	Tube diameter		
	8 x 0.75 mm or conical	10 x 0.75 mm	15 x 0.75 mm
	max. permissible pressure	max. permissible pressure	max. permissible pressure
100°C	89 bar	72 bar	48 bar
150°C	83 bar	67 bar	45 bar
200°C	78 bar	63 bar	42 bar
300°C	59 bar	47 bar	32 bar

With operating temperatures above 420°C, the permissible operating time is limited to 200,000 hours. Please take note of TRD 508 in this respect.

Permissible incident flow velocity

Temperature:	+200°C	
Thermal medium:	air (1) water, oil (2)	
Tube dia. “D”:	————————	8 mm
	- - - - - - - -	10 mm
	- - - - - - - - - - - - - -	15 mm

Permissible incident flow velocity “v” at the maximum permissible pressure loading and different immersion tube lengths “S”

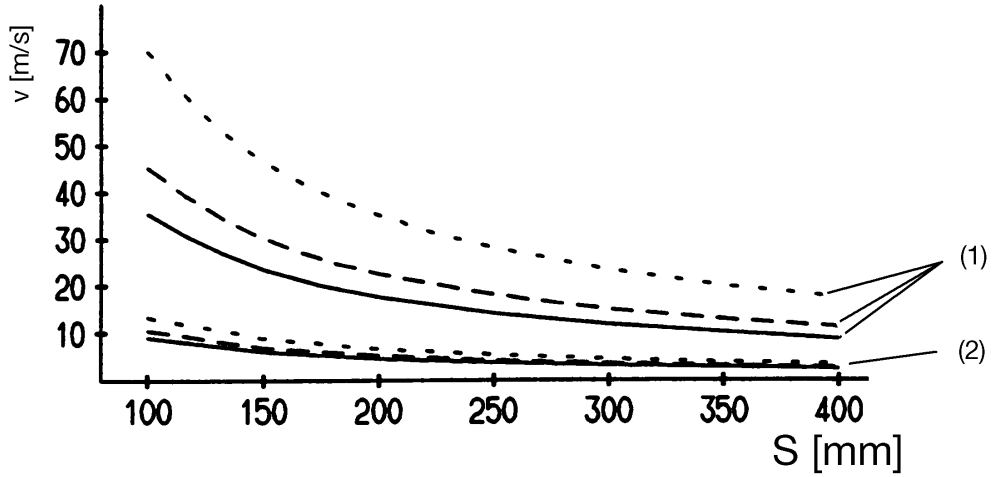

Permissible incident flow velocity “v” at the maxiumum permissible pressure loading and different immersion tube temperatures “t”

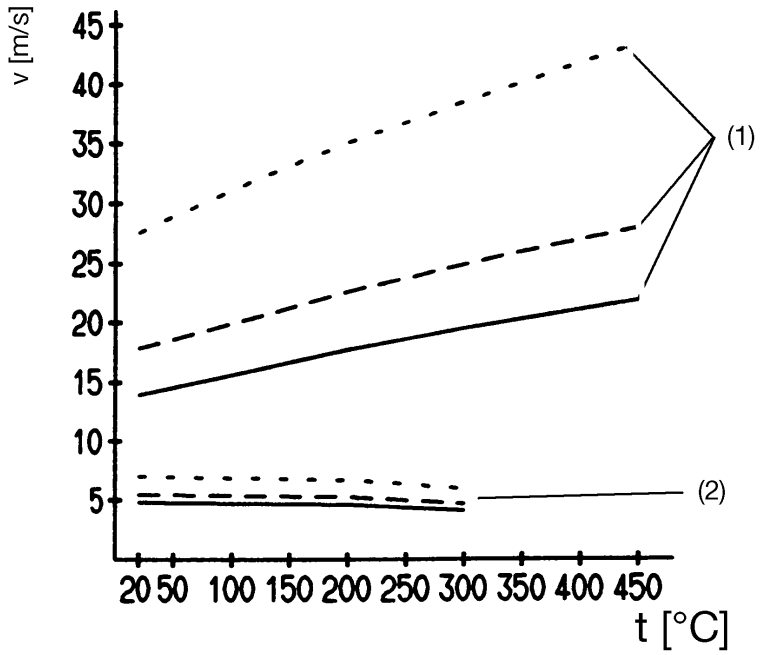

3.5.1.2 Stainless steel pocket

Material

Tube: X 6 CrNiMoTi 17122
Screw-in/weld-in nipple: X 6 CrNiMoTi 17122

Loading

Temperature	Tube diameter		
	8 x 0.75 mm or conical	10 x 0.75 mm	15 x 0.75 mm
	max. permissible pressure	max. permissible pressure	max. permissible pressure
100°C	92 bar	74 bar	50 bar
150°C	88 bar	71 bar	48 bar
200°C	83 bar	67 bar	45 bar
300°C	72 bar	58 bar	39 bar
400°C	67 bar	54 bar	36 bar

Permissible incident flow velocity

on request

3.5.1.3 Brass pocket

Material

CuZn, nickel plated

Loading

Temperature	Tube diameter		
	8 x 0.75 mm	10 x 0.75 mm	15 x 0.75 mm
	max. permissible pressure		
100°C	50 bar	40 bar	27 bar
150°C	48 bar	39 bar	26 bar

Permissible incident flow velocity

on request

3.5.2 Probe mountings 10, 21, 60, 65

Material stainless steel or brass, according to choice

Loading only for use in unpressurized media

Probe mounting	60, 65	10, 21
Maximum temperature	200°C*	500°C*

*depending on the control range

3.6 Mounting the probe

The temperature probe (2) must be immersed in the medium for its entire length, otherwise there will be appreciable deviations from the switching point.

In the case of probe mountings "20", "21", "22" and "23", the temperature probe is secured in the pocket by a clamping clip (1).

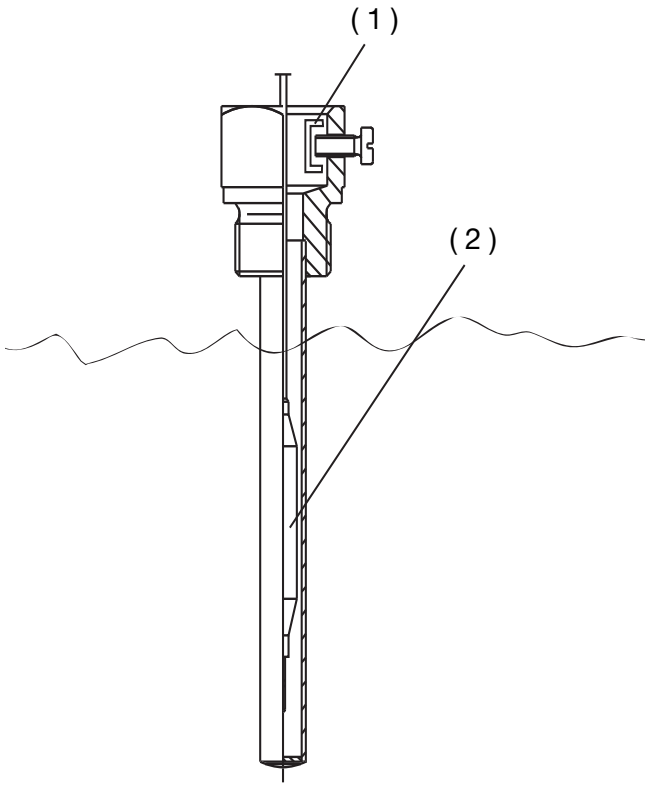

4 Installation

4.1 Regulations and notes

In case of electrical connections in explosive zones, compliance is required with the relevant specifications.

- The electrical connection must only be carried out by qualified personnel.
- The choice of cable, the installation and the electrical connection must conform to the requirements of VDE 0100 “Regulations on the Installation of Power Circuits with Nominal Voltages below 1000 V” or the appropriate local regulations.
- If contact with live parts is possible while working on the instrument, it must be completely disconnected from the supply.
- Earth the instrument at the PE terminal to the protective earth conductor. This cable must have at least the same cross-section as used for the supply cables. Earth cables must be wired in a start configuration to a common earth point that is connected to the protective earth of the supply. Do not loop earth cables, i.e. do not run them from one instrument to another.
- Apart from faulty installation, incorrect settings on the thermostat may also affect the proper functioning of the subsequent process or lead to damage. Setting up must therefore be restricted to qualified personnel. Please observe the relevant safety regulations for such matters.

4.2 Electrical connection

- ✱ Open the housing.
  ⑨ Chapter 3.2 "Opening the surface-mounting thermostat", page 8
- ✱ Pass the connection cable (6 to 12 mm cable dia.) through the Ex cable gland (1).
  ⑨ Chapter 3.1 "Dimensions", page 7
- ✱ Make the connection to the terminals (2) in accordance with the connection diagram.
- ✱ Fitting type X (no special tools).
- ✱ The connecting cable must have a fixed installation.

☞ ✱ Connect the protective earth conductor to the PE terminal.

- ✱ Position connection cable in the housing and tighten the Ex cable gland (1) using the tightening torque given below:
  ⑨ Chapter 3.1 "Dimensions", page 7

Screw-in thread (1.1) into housing	= 3.75 Nm
Compression screw (1.2)	= 3.50 Nm for 6 mm cable dia.
Compression screw (1.2)	= 2.50 Nm for 12 mm cable dia.

- ✱ Replace the protective cap on the terminal block.

4.3 Connection diagrams

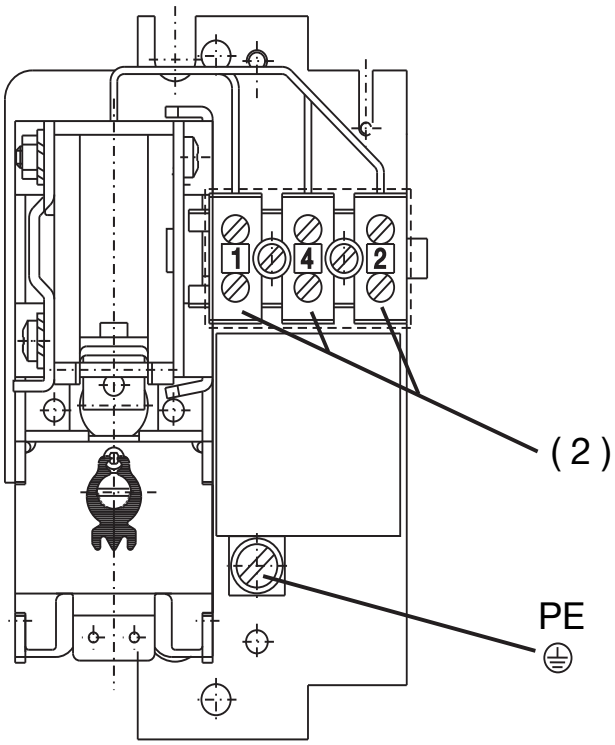

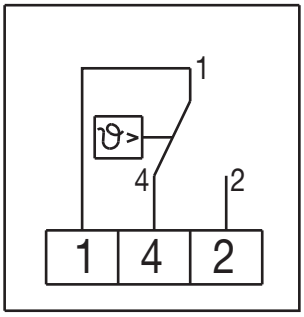

5 Settings

5.1 Limit setting

✱ Open housing.
⑨ Chapter 3.2 “Opening the surface-mounting thermostat”, page 8

✱ Set the limit at the setpoint spindle (5).

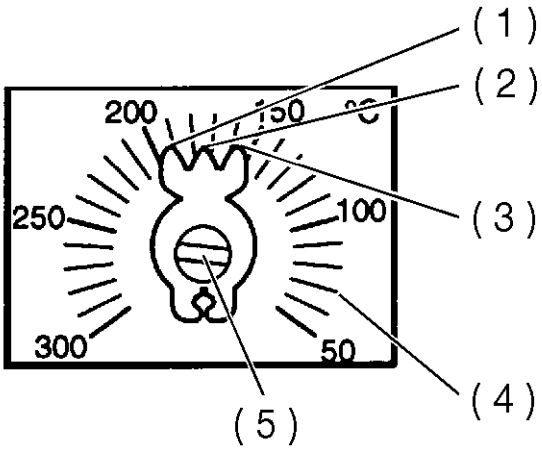

(1) Upper stop
(2) Setpoint marker
(3) Lower stop
(4) Scale division
(5) Setpoint spindle

5.2 Self-monitoring

5.2.1 Response to a fracture in the measuring system

☞ On the STW, the circuit stays open **permanently** in the event of a fracture of the measuring system (leakage).

5.2.2 Response to low temperature

☞ The current circuit of the STW is opened when the probe temperature goes below approx. -20°C

When the temperature rises above the minimum probe temperature, the STW resets itself automatically.

6.1 Technical data

Ex marking

II 2G	Ex ed IIC T6	for potentially explosive gas atmospheres
II 2D	Ex tD A21 IP65 T80°C	for potentially explosive dust atmospheres

Explosion protection

II 2G Equipment group II, Category 2,
equipment for potentially explosive gas atmospheres

II 2D Equipment group II, Category 2,
equipment for potentially explosive dust atmospheres

Type of protection:
Ex ed IIC T6

Ex	**General requirements** European Standard EN 60079-0
e	**Increased safety** European Standard EN 60079-7
d	**Flameproof enclosure** European Standard EN 60079-1
IIC	**Gas group**
T6	**Temperature class**

IP65 T80°C
Application in combustible dusts
European Standard EN 61241-0
EN 61241-1

IP65	**Protection to EN 60 529-IP65**
T80°C	**max. permissible surface temperature** (application in combustible dusts)

Test certificate

PTB 03 ATEX 1167

Important note for installation and operation!

When evaluating the temperature relationships, the heat conduction must be taken into account, as well as the max. permissible ambient temperaure and the self-heating.

Permissible ambient temperature in operation

	Capillary	Thermostat head
max.	+50°C	+50°C
min.	-20°C	-20°C

Permissible probe temp.

max. limit +15% (+550°C with limit > 450°C)

Permissible storage temp.

max. +50°C, min. -20°C

Housing

black polyester housing, glassfiber-reinforced
with lead-sealable screws

Connection cable

diameter 6 to 12 mm, conductor cross-section up to 2.5 mm^2

Switching differential in % of control/limit range

Thermostats with end of scale ≤ 350°C			Thermostats with end of scale > 350°C		
Switching action	Nominal value	Possible measured value	Switching action	Nominal value	Possible measured value
TW	3	3-5	TW	5	5-9
STW	5	5-7	STW	6	6-11

Contact rating

5 A, 230 V AC +10%, p.f. ≥ 0.9

Fuse required

see contact rating

Protection

EN 60 529 - IP65

Operating medium

water, oil, air, superheated steam

Time constant $t_{0.632}$

in water	in oil	in air / superheated steam
≤ 45 sec	≤ 60 sec	≤ 120 sec

Action

to EN 60 730-2-9, DIN EN 14597

TW: 2BL

STW: 2BKLNP

Nominal position (NL)

to DIN 16527, NL 0 — NL 90 (other NL on request)

Weight

approx. 0.6 kg

Capillary and probe material

End of scale	Capillary	Probe
up to +200°C	copper, Mat. Ref. 2.0090 electrotinned 1.5 mm dia.	copper, Mat. Ref. 2.0090 electrotinned brazed
up to +300°C	copper, Mat. Ref. 2.0090 electrotinned 1.5 mm dia.	stainless steel, Mat. Ref. 1.4571 brazed
up to +500°C	stainless steel, Mat. Ref. 1.4571 1.5 mm dia.	stainless steel, Mat. Ref. 1.4571 welded
up to +300°C	stainless steel, Mat. Ref. 1.4571 1.5 mm dia.	stainless steel, Mat. Ref. 1.4571 welded

Min. bending radius of capillary

5 mm

Switching point accuracy

in % of scale span, referred to limit at T_a +22°C.

TW	in upper third of scale	$^{+0}_{-4}$ %
	at scale start	$^{+0}_{-6}$ %
STW	in upper third of scale	$^{+0}_{-5}$ %
	at scale start	$^{+0}_{-7}$ %

Mean ambient temperature effect

in % of scale span, referred to limit.

A deviation of the ambient temperature at the housing and / or the capillary from the calibrated ambient temperature +22°C will result in a switching point displacement:
higher ambient temperature = lower switching point
lower ambient temperature = higher switching point

Surface-mounting thermostats with end of scale					
< +200°C		≥ +200°C ≤ +350°C		> 350°C	
TW	STW	TW	STW	TW	STW
on thermostat head %/°C					
0.08	0.17	0.06	0.13	0.14	0.12
on capillary %/°C per meter					
0.047	0.054	0.09	0.11	0.04	0.03

Physikalisch-Technische Bundesanstalt

Braunschweig und Berlin

(1) **EG-Baumusterprüfbescheinigung**

(2) Geräte und Schutzsysteme zur bestimmungsgemäßen Verwendung in explosionsgefährdeten Bereichen - **Richtlinie 94/9/EG**

(3) EG-Baumusterprüfbescheinigungsnummer

PTB 03 ATEX 1167

(4) Gerät: Aufbau-Thermostat Typ ATH-Ex-..

(5) Hersteller: JUMO GmbH & Co. KG

(6) Anschrift: Moltkestrasse 13-31, 36039 Fulda, Deutschland

(7) Die Bauart dieses Gerätes sowie die verschiedenen zulässigen Ausführungen sind in der Anlage und den darin aufgeführten Unterlagen zu dieser Baumusterprüfbescheinigung festgelegt.

(8) Die Physikalisch-Technische Bundesanstalt bescheinigt als benannte Stelle Nr. 0102 nach Artikel 9 der Richtlinie des Rates der Europäischen Gemeinschaften vom 23. März 1994 (94/9/EG) die Erfüllung der grundlegenden Sicherheits- und Gesundheitsanforderungen für die Konzeption und den Bau von Geräten und Schutzsystemen zur bestimmungsgemäßen Verwendung in explosionsgefährdeten Bereichen gemäß Anhang II der Richtlinie.

Die Ergebnisse der Prüfung sind in dem vertraulichen Prüfbericht PTB Ex 04-13177 festgehalten.

(9) Die grundlegenden Sicherheits- und Gesundheitsanforderungen werden erfüllt durch Übereinstimmung mit

EN 50014:1997 + A1 + A2 EN 50018: 2000 EN 50019: 2000
EN 50281-1-1:1999

(10) Falls das Zeichen „X" hinter der Bescheinigungsnummer steht, wird auf besondere Bedingungen für die sichere Anwendung des Gerätes in der Anlage zu dieser Bescheinigung hingewiesen.

(11) Diese EG-Baumusterprüfbescheinigung bezieht sich nur auf Konzeption und Prüfung des festgelegten Gerätes gemäß Richtlinie 94/9/EG. Weitere Anforderungen dieser Richtlinie gelten für die Herstellung und das Inverkehrbringen dieses Gerätes. Diese Anforderungen werden nicht durch diese Bescheinigung abgedeckt.

(12) Die Kennzeichnung des Gerätes muß die folgenden Angaben enthalten:

Ex II 2 G/D EEx ed IIC T6 IP65 T80°C

Zertifizierungsstelle Explosionsschutz
Im Auftrag

Dr.-Ing. U. Klausmeyer
Regierungsdirektor

Braunschweig, 06. Februar 2004

PHYSIKALISCH-TECHNISCHE BUNDESANSTALT 30

Seite 1/2

EG-Baumusterprüfbescheinigungen ohne Unterschrift und ohne Siegel haben keine Gültigkeit.
Diese EG-Baumusterprüfbescheinigung darf nur unverändert weiterverbreitet werden.
Auszüge oder Änderungen bedürfen der Genehmigung der Physikalisch-Technischen Bundesanstalt.

Physikalisch-Technische Bundesanstalt • Bundesallee 100 • D-38116 Braunschweig

Physikalisch-Technische Bundesanstalt

Braunschweig und Berlin

(13) **Anlage**

(14) **EG-Baumusterprüfbescheinigung PTB 03 ATEX 1167**

(15) Beschreibung des Gerätes

Der Aufbau-Thermostat Typ ATH-Ex-.. dient zur Regelung bzw. Steuerung von Temperaturen.

Technische Daten

Bemessungsspannung max.	250 V
Bemessungsstrom max.	5 A
zul. Umgebungstemperatur	-20 ... +50°C

Andere als die genannten Bemessungswerte sind bei Einhaltung des Ein- und Ausschaltvermögens entsprechend den einschlägigen Bestimmungen zulässig und - abhängig von der Betriebsart, der Gebrauchskategorie usw. - vom Hersteller festgelegt.

(16) Prüfbericht PTB Ex 04-13177

(17) Besondere Bedingungen

keine;

zusätzliche Hinweise für Errichtung und Betrieb

1. Bei der Beurteilung der Temperaturverhältnisse ist neben der max. zulässigen Umgebungstemperatur und der Eigenerwärmung ggf. die Wärmeleitung mit einzubeziehen.
2. Die Anschlussleitung ist fest zu verlegen.

(18) Grundlegende Sicherheits- und Gesundheitsanforderungen

Erfüllt durch Übereinstimmung mit den vorgenannten Normen.

Zertifizierungsstelle Explosionsschutz
Im Auftrag

Braunschweig, 06. Februar 2004

Dr.-Ing. U. Klausmeyer
Regierungsdirektor

PHYSIKALISCH-TECHNISCHE BUNDESANSTALT 30

Seite 2/2

EG-Baumusterprüfbescheinigungen ohne Unterschrift und ohne Siegel haben keine Gültigkeit.
Diese EG-Baumusterprüfbescheinigung darf nur unverändert weiterverbreitet werden.
Auszüge oder Änderungen bedürfen der Genehmigung der Physikalisch-Technischen Bundesanstalt.

Physikalisch-Technische Bundesanstalt • Bundesallee 100 • D-38116 Braunschweig

Physikalisch-Technische Bundesanstalt

Braunschweig und Berlin

1. ERGÄNZUNG

gemäß Richtlinie 94/9/EG Anhang III Ziffer 6

zur EG-Baumusterprüfbescheinigung PTB 03 ATEX 1167

Gerät: Aufbau-Thermostat Typ ATH-Ex-....

Kennzeichnung: **II 2G Ex e d IIC T6**
II 2D Ex tD A21 IP65 T80°C

Hersteller: JUMO GmbH & Co. KG

Anschrift: Moritz-Juchheim-Str. 1, 36039 Fulda, Deutschland

Beschreibung der Ergänzungen und Änderungen

Zertifizierung nach Normenreihe EN 60079-0 ff. und EN 61241-0 ff.

Mit dieser Ergänzung ist der Aufbau-Thermostat mit Bezug auf die Normenreihen EN 60079-0 ff. bzw. EN 61241-0 ff. zertifiziert.

Angewandte Normen

EN 60079-0:2006	EN 60079-1:2004	EN 60079-7:2006
EN 61241-0:2006	EN 61241-1:2004	

Bewertungs- und Prüfbericht: PTB Ex 10-18050

Errichtungshinweise

Die Errichtungshinweise der EG-Baumusterprüfbescheinigung sind zu beachten.

Zertifizierungssektor Explosionsschutz
Im Auftrag

Braunschweig, 30. Juli 2010

Dr.-Ing. M. Thedens
Oberregierungsrat

ZSEx10101d.dot

Seite 1/1

EG-Baumusterprüfbescheinigungen ohne Unterschrift und ohne Siegel haben keine Gültigkeit.
Diese EG-Baumusterprüfbescheinigung darf nur unverändert weiterverbreitet werden.
Auszüge oder Änderungen bedürfen der Genehmigung der Physikalisch-Technischen Bundesanstalt.

Physikalisch-Technische Bundesanstalt • Bundesallee 100 • 38116 Braunschweig • DEUTSCHLAND

JUMO GmbH & Co. KG
Moritz-Juchheim-Straße 1
36039 Fulda, Germany

Telefon: +49 661 6003 - 0
E-Mail: mail@jumo.net
Internet: www.jumo.net

JUMO

EG Konformitätserklärung

EC Declaration of Conformity / Déclaration CE de conformité

Dokument-Nr. *Document No. / Document n°*	CE 223
Hersteller *Manufacturer / Etabli par*	JUMO GmbH & Co. KG
Anschrift *Address / Adresse*	Moritz-Juchheim-Straße 1, 36039 Fulda
Produkt *Product / Produit*	Beschreibung: Aufbauthermostat Typ/ Serie: ATH-Ex-.. Typenblatt-Nr.: 60.5041

Wir erklären in alleiniger Verantwortung, dass das bezeichnete Produkt die Schutzanforderungen der Europäischen Richtlinien erfüllt.
We hereby declare in sole responsibility that the designated product fulfills the safety requirements of the European directives.
Nous déclarons sous notre seule responsabilité que le produit remplit les directives européennes.

Richtlinie *Directive / Directive*			Datum der Erstanbringung des CE-Zeichens auf dem Produkt *Date of first application of the CE mark to the product* *Date de 1ère application du sigle CE sur le produit*
2004/108/EG	[EMV-Richtlinie]		96
2006/95/EG	[Niederspannungs-Richtlinie]		96
97/23/EG	[Druckgeräterichtlinie, Modul B+D]	Kategorie IV	03
94/9/EG	[Explosionsschutz-Richtlinie-ATEX]		04

EG-Baumusterprüfbescheinigung
Type examination / Tests échantillon

PTB 03 ATEX 1167
IS-TAF-MUC 07 12 73377 020

Angewendete Normen
Standards applied / Normes appliquées

DIN EN 61326-1	Ausgabe: 10.2006	EN 60079-0	Ausgabe: 2006
DIN EN 60730-1	Ausgabe: 06.2009	EN 60079-1	Ausgabe: 2004
DIN EN 60730-2-9	Ausgabe: 07.2011	EN 60079-7	Ausgabe: 2006
DIN EN 14597	Ausgabe: 12.2005	EN 61241-0	Ausgabe: 2006
AD 2000 Merkblätter		EN 61241-1	Ausgabe: 2004

Anerkannte Qualitätssicherungssysteme der Produktion
Recognized quality assurance systems used in production / Organisme notifié agréé

nach Richtlinie 94/9/EG Modul D */ Directive 94/9/EC Module D / Directive européenne 94/9/CE module D*
TÜV NORD CERT GmbH, Am TÜV 1, D 30519 Hannover, Germany
Kennnummer 0044, Mitteilungsnummer TÜV 99 ATEX 1454 Q.
Identification No. 0044, Notification No. TÜV 99 ATEX 1454 Q / N° d'identification 0044, N° de signification TÜV 99 Atex 1454 Q

nach Richtlinie 97/23/EG Modul D */ Directive 97/23/EC Module D / Directive européenne 97/23/CE module D*
TÜV SÜD Industrie Service GmbH, Dudenstraße 28, 68167 Mannheim, Germany
Kennnummer 0036, Zertifikat-Nr. DGR-0036-QS-989-11
Identification No. 0036, Certificate No. DGR-0036-QS-989-11 / N° d'identification 0036 , N° de certificat DGR-0036-QS-989-11

Aussteller:
Issued by: / Etabli par:

Firma */ Company / Société*
JUMO GmbH & Co. KG, Fulda

Ort, Datum:
Place, date: / Lieu, date:

Fulda, 2012-10-10

Rechtsverbindliche Unterschrift
Legally binding signature
Signature juridiquement valable

Geschäftsbereichsleitung Verkauf und Produktion
Head of Division Sales and Production
Direction du département Ventes et Production

ppa. Wolfgang Vogl

JUMO GmbH & Co. KG
Street address:
Moritz-Juchheim-Straße 1
36039 Fulda, Germany
Delivery address:
Mackenrodtstraße 14
36039 Fulda, Germany
Postal address:
36035 Fulda, Germany
Phone: +49 661 6003-0
Fax: +49 661 6003-607
e-mail: mail@jumo.net
Internet: www.jumo.net

JUMO Instrument Co. Ltd.
JUMO House
Temple Bank, Riverway
Harlow, Essex CM20 2TT, UK
Phone: +44 1279 635533
Fax: +44 1279 635262
e-mail: sales@jumo.co.uk
Internet: www.jumo.co.uk

JUMO Process Control, Inc.
8 Technology Boulevard
Canastota, NY 13032, USA
Phone: 315-697-5866
1-800-554-JUMO
Fax: 315-697-5867
e-mail: info@jumo.us
Internet: www.jumo.us