EM type series

Panel-mounting thermostats

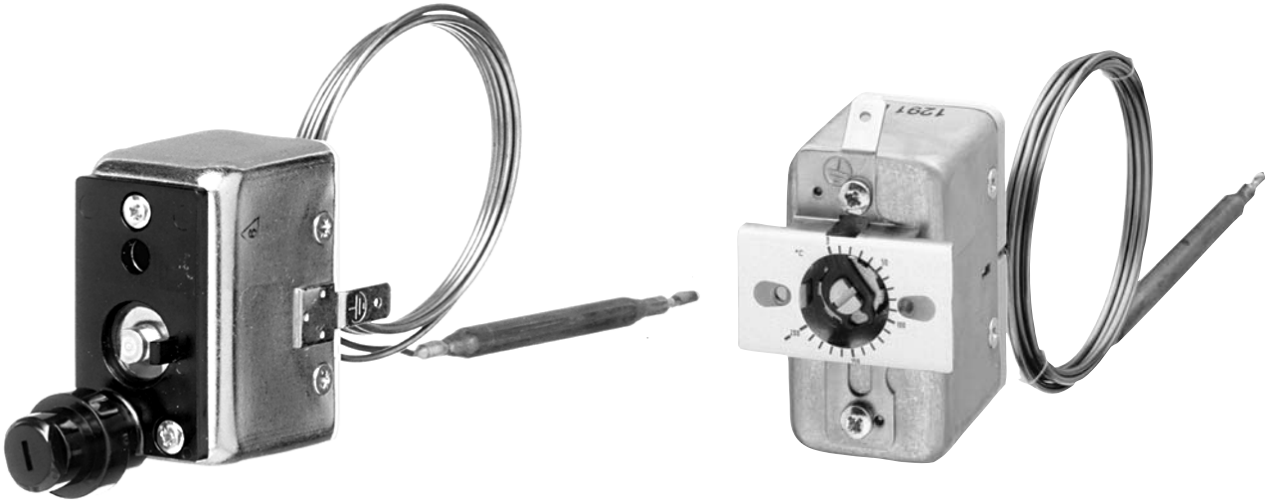

B 602026.0

Operating instructions

JUMO

2013-03-20/00073776

☞ Please read this operating manual before starting up the device. Keep the operating manual in a place accessible to all users at all times. Please help us to improve these instructions where necessary. Your comments are highly appreciated.

Phone +49(0)6 61 - 60 03-7 16
Fax +49(0)6 61 - 60 03-5 04

☞ All necessary settings and required work inside the device are described in this operating manual. If any difficulties should still arise dur-ing start-up, you are asked not to carry out any unauthorized manipulations on the unit. You could endanger your rights under the device warranty! Please contact the nearest subsidiary or the head office.

Inhalt

1 Introduction 4

1.1 Typographical conventions 4

1.1.1 Warning signs 4

1.1.2 Indicative signs 4

1.2 Application 5

1.3 Identification 5

1.4 Safety information 6

2 Identifying the device 7

2.1 Type plate (example) 7

2.2 Type designation 7

3 Installation 8

3.1 Dimensions 8

3.2 Fastening the panel-mounting thermostat 9

3.2.1 Fasting the switching head 9

3.3 Capillary / temperature probe / sheath 10

3.3.1 General information 10

3.3.2 Approved process connections 11

3.3.3 Sheath made of steel 22, 23, 32, 41, 42 and 45 11

3.3.4 Sheath made of stainless steel 20, 22, 40 and 41 13

3.3.5 Sheath made of brass 20 and 40 13

3.3.6 Probe connections 50, 52 and 54 13

4 Installation 15

4.1 Standards and information 15

4.2 Electrical connection 15

4.3 Wiring diagrams 16

5 Settings 17

5.1 Unlocking the safety temperature limiter (STB) 17

5.2 Limit value setting 18

5.3 Self-monitoring of the STB and STW (STB) 18

5.4 Use of the STW (STB) as STB 18

6 Device Description 19

6.1 Technical data 19

1 Introduction

1.1 Typographical conventions

1.1.1 Warning signs

⚠

Danger

This symbol is used when there may be **danger to personnel** if the instructions are ignored or not followed correctly!

☝

Caution

This symbol is used where there may be **damage to equipment** if the instructions are disregarded or not followed accurately!

1.1.2 Indicative signs

☞

Note

This symbol is used to draw your **special attention** to a remark.

⇨

Reference

This symbol refers to **additional information** in other chapters or sections.

abc[1]

Footnote

Footnotes are comments that **refer to specific parts** of the text. Footnotes consist of two parts:

A marker in the text and the foot note text itself.

The markers in the text are arranged as continuous superscript numbers.

The footnote text is located at the end of the page, in a typeface 2 degrees smaller than the main text, and is preceded by a superscript number.

*

Handling instructions

This symbol indicates that an **action to be performed** is described.

The individual steps are indicated by asterisks, for example:

* Opening the case

1.2 Application

Thermostats are used to control and monitor thermal processes.

Panel-mounting thermostats operate according to the fluid or gas expansion principle. The electrical switching element is a micro switch.

The devices of the EM type series are available as safety -temperature monitors STW and safety temperature limiters STB.
In the event of a malfunction, the STB switches the monitored machine line to an operational safe status.

Versions as per: DIN EN 14597

STW (STB)	Safety temperature monitor
STB	Safety temperature limiter

Design test as per:

- DIN EN 14597
- Directive governing pressure systems 97/23/EC
- DVGW Gas equipment directive 90/396/EEC (only type EM-80)

The declaration of conformity can be found in the internet under:
www.jumo.net ⇨ Products ⇨ Thermostats ⇨ Data sheet 602026
or is available on request.

Bending/kinking or cutting the probe line of the panel-mounting thermostats of the EM type series will lead to a permanent device failure!

1.3 Identification

Depending on the device version:

DGRL DIN Geprüft DVGW c UL us CE CE 0036

(for detailed information, see type plate imprint)

1.4 Safety information

☞ Filling fluid can emerge in the event of a measuring system break. A hazard to health is excluded as per the present information.

Physical and toxic features of the expansion means, which could emerge in the event of a measuring system break:

Control range with scale limit value °C	Hazardous reaction	Fire and explosion hazard		hazardous to waters	Information about toxicology		
		Ignition temperature °C	Explosion limit Vol.%		irritant	hazardous to health	toxic
< +200	no	+355	0.6 - 8	Yes	Yes	1	no
≥ +200 ≤ +350	no	+490	- -	Yes	Yes	1	no
> +350 ≤ +500	no	no	no	no	no	no	no

[1] There is currently no statement by the health authority concerning hazards to health in the event of short-term exposure and low concentration, e.g. in the event of a measuring system break.

2.1 Type plate (example)

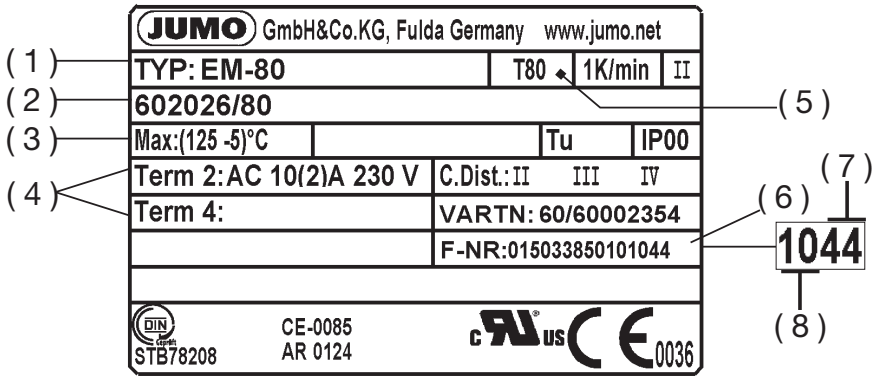

(1) Type

(2) Type code

(3) Control- and limit value range / ambient temperature at which this thermostat was calibrated (option)

(4) Contact rating

(5) Permissible ambient temperature

(6) Serial number

(7) Week of manufacture

(8) Year of manufacture

2.2 Type designation

Type designation

EM - .. - .. - .. / ..	Panel-mounting thermostat with single-pole micro switch, connection "10" as standard (plain cylindrical probe)
- 20 - E	Safety temperature monitor STW (STB) with change-over contact, limit value adjustable
- 30 - E	Safety temperature monitor STW (STB) with change-over contact, limit value permanently factory-set
- 80	Safety temperature limiter STB with N/C contact and restart lock, limit value permanently factory-set
/ 707	Temperature compensation on the switching head
/ 702	Snap switch contacts, gold plated
/ 574	Micro switch with N/C contact, restart lock and additional signal contact (STB only)

3 Installation

3.1 Dimensions

EM-80
with central
fastening
(as standard)

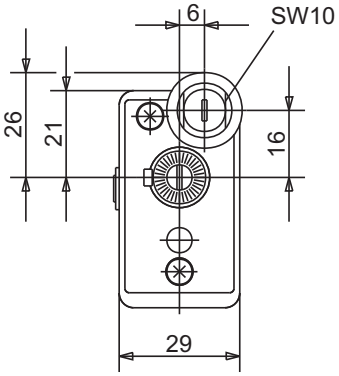

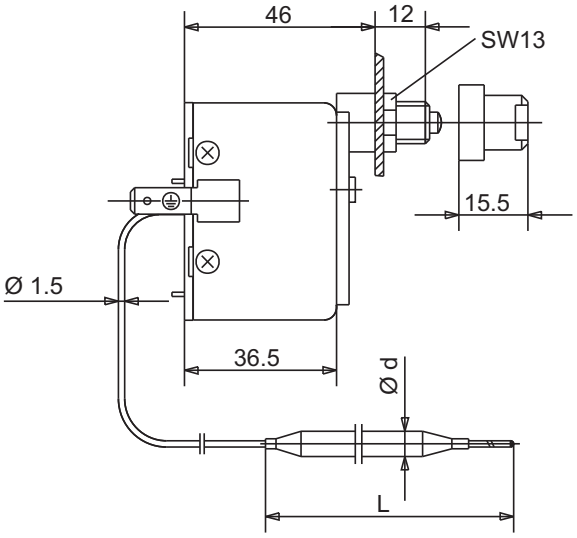

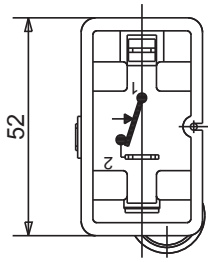

EM-20-E
EM-30-E
EM-80
with
fastening bridge
704, 705, 706

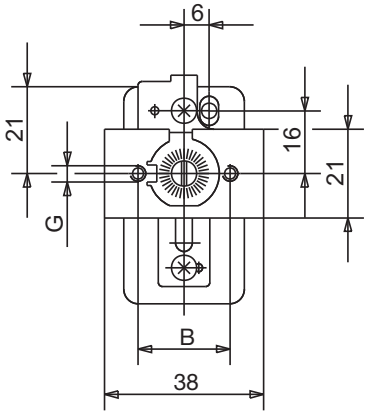

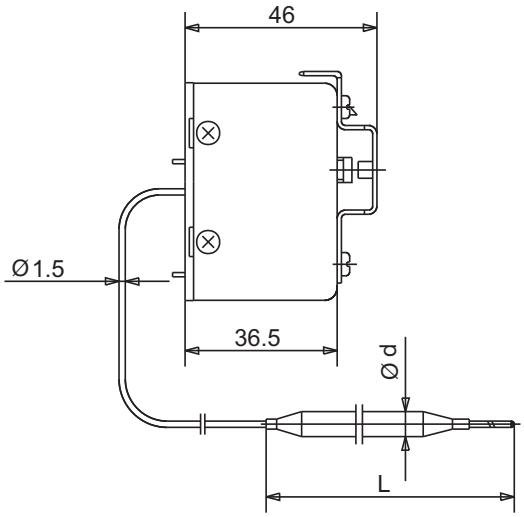

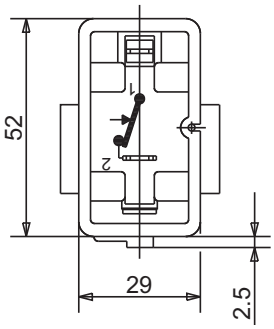

3.2 Fastening the panel-mounting thermostat

Operating position

any

3.2.1 Fasting the switching head

Type EM-80 with central fastening

Central fastening

(1) Cap nut M10 x 1 (width across flats 10)

(2) Fastening nut M10 x 1 (width across flats 13)

(3) Panel

(4) Restart knob

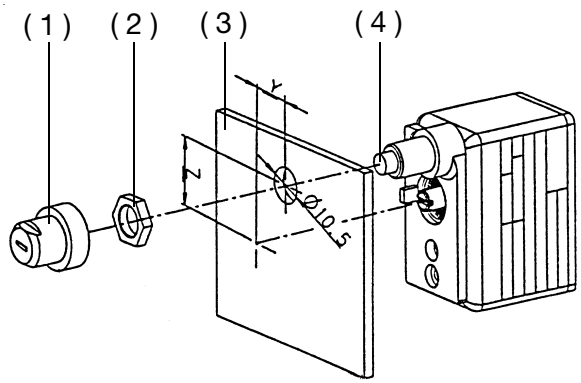

Type	Dimension (mm)	
	X	Y
EM-80	16	6

Type EM-20-E, EM-30-E, EM-80 with fastening bridge

With two M3 screws (M4, for extra code 704) on the chassis:

(1) Screw

(2) Panel

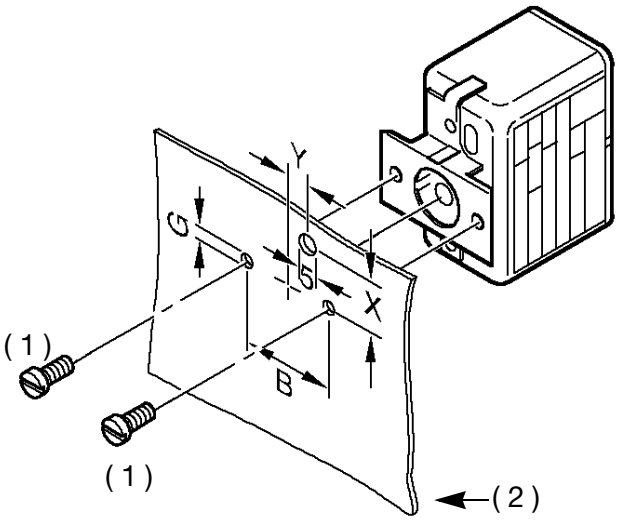

Type	Dimension (mm)	
	X	Y
EM-20-E, EM-30-E	- -	- -
EM-80	15	6

Extra code (all types)	Dimension (mm)	
	B	G
706 (as standard)	3.5	22
704	4.5	28
705	3.5	33

3.3 Capillary / temperature probe / sheath

3.3.1 General information

Bending/kinking or cutting the capillary of the panel-mounting thermostats will lead to a permanent device failure!

The minimum admissible bending radius of the capillary is 5 mm.

The temperature probe must be installed in JUMO sheaths, otherwise, the approval of the panel-mounting thermostats will become null and void.

Ensure that the temperature probe is completely submerged in the medium to be measured. Ensure that the temperature probe or the sheath does **not** make contact with the container or pipe walls.

Only use the devices in combination with the factory-supplied sheaths (d = 8 mm or d = 10 mm) to ensure the general response accuracy.

The d = 10 mm sheaths must only be used for d = 8 mm probes.

One sheath (15 x 0.75 mm) can be used for 2 or 3 cylindrical probes with a diameter of d = 6 mm.
When using a sheath for 2 probes, fit the factory-supplied contact pressure spring into the sheath.

For the operating medium air, select the connection type "10“ (without sheath).

For sheaths 22, 41, 42 and 45 made of material St35.8 I, the admissible service life is limited to 200,000 operating hours at operating temperatures exceeding +420 °C. Adhere to the TRD 508 for applications
in this range.

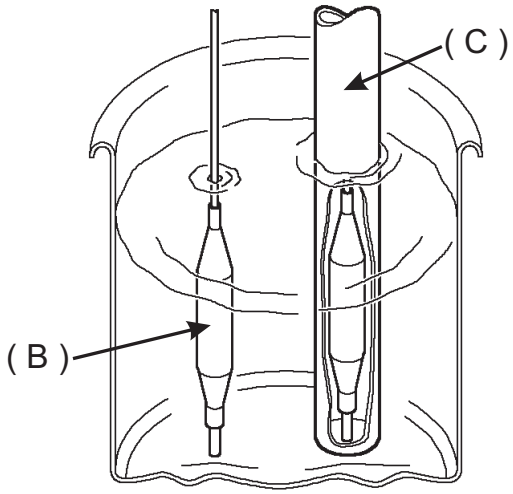

(B) Temperature probe
(C) Immersion tube

3.3.2 Approved process connections

Temperature probe 10

Screw-connections 50, 52, 54, 60, 65

Sheaths 20, 21, 22, 23, 24, 40, 41, 42

☞ **refer to data sheet 606710 !**

3.3.3 Sheath made of steel 22, 23, 32, 41, 42 and 45

Material

Tube	Screw-in nipples	Welding nipples
St 35.8 I	Steel 1.0038	Steel 1.5415

Capacity

Temperature	Pipe diameter		
	8 x 0.75 mm or conical	10 x 0.75 mm	15 x 0.75 mm
	Maximum admissible pressure		
100 °C	89 bar	72 bar	48 bar
150 °C	83 bar	67 bar	45 bar
200 °C	78 bar	63 bar	42 bar
300 °C	59 bar	47 bar	32 bar
350 °C	50 bar	40 bar	27 bar

max. admissible operating temperature

Tube	Nipple	max. admissible operating temperature*	
		static load	without load
St 35.8 I	Screw-in nipples	+300 °C	+530 °C
	Welding nipples	+450 °C	

* observe the max. admissible probe temperature of the respective thermostat version. For operating temperatures > +420 °C: observe the operating life of 200,000 h at a static load TRD508. Sheath "21" (UO) and "31" (UZO): Use only in pressureless medium.

permissible flow rates

Material:	St35.8 I	
Temperature:	+200 °C	
Heat transfer oil:	Air (1) water, oil (2)	
Pipe diameter Ø:	————————	8 mm
	- - - - - - - -	10 mm
	. . . . .	15 mm

Permissible flow rate [m/s] at maximum admissible pressure load and different immersion tube length "S“

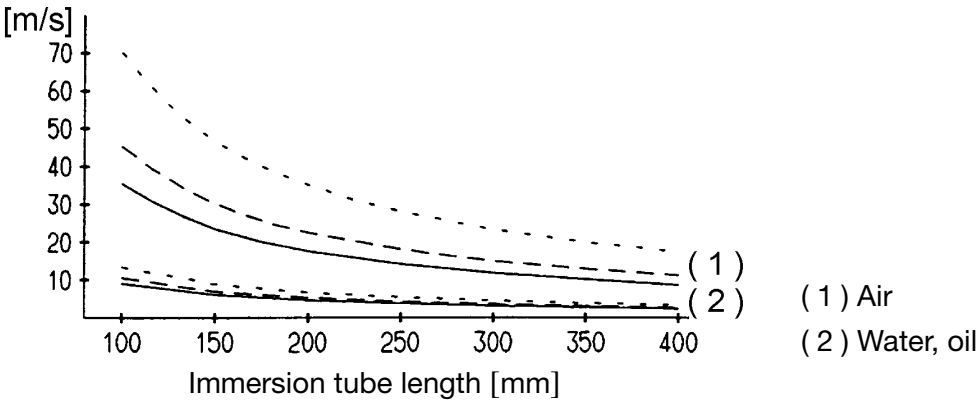

Permissible flow rate [m/s] at maximum admissible pressure load and different immersion tube temperature.

Material:	St35.8 I	
Immersion tube length "s":	200 mm	
Heat transfer oil:	Air (1) water, oil (2)	
Pipe diameter Ø:	————————	8 mm
	- - - - - - - -	10 mm
	. . . . .	15 mm

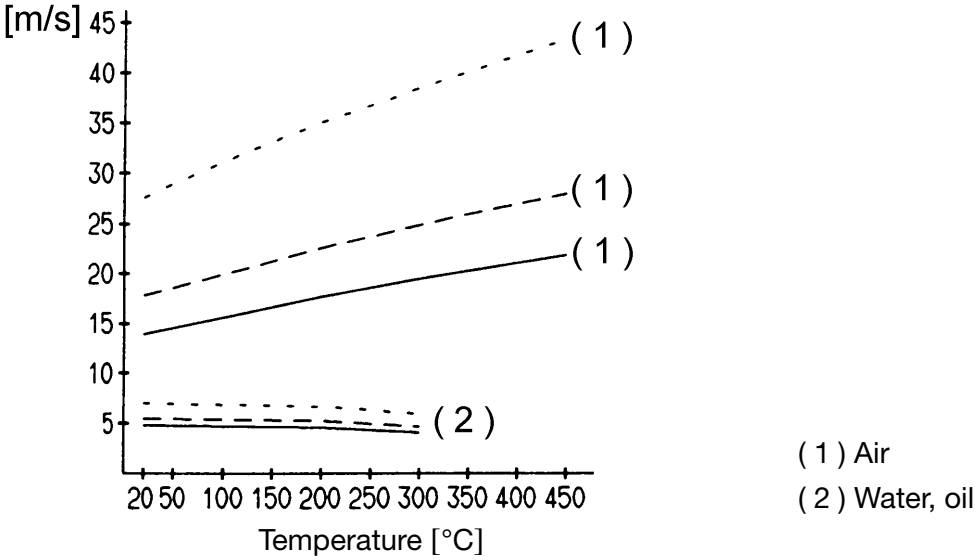

3.3.4 Sheath made of stainless steel 20, 22, 40 and 41

Capacity

Material of pipe and nipple: Stainless steel (1.4571)			
Temperature	Pipe diameter Ø		
	8 x 0.75 mm or conical	10 x 0.75 mm	15 x 0.75 mm
	Maximum admissible pressure		
100 °C	92 bar	74 bar	50 bar
150 °C	88 bar	71 bar	48 bar
200 °C	83 bar	67 bar	45 bar
300 °C	72 bar	58 bar	39 bar
400 °C	67 bar	54 bar	36 bar

3.3.5 Sheath made of brass 20 and 40

Capacity

Material of pipe and nipple: CuZn, nickel plated			
Temperature	Pipe diameter Ø		
	8 x 0.75 mm	10 x 0.75 mm	15 x 0.75 mm
	Maximum admissible pressure		
100 °C	50 bar	40 bar	27 bar
150 °C	48 bar	39 bar	26 bar

3.3.6 Probe connections 50, 52 and 54

(probe making directly contact with the medium)

Material of nipple	CuZn	Steel (1.0038)	Stainless steel (1.4571)
Temperature °C	200	300	400

Probe material	Ø mm	Device function
		STB, STW (STB)
Cu-DHP St35 1.4571	4	2 bar
	5	
	6	
	7	
	8	
	9	
	10	

Design 10, **15, 21, 60, 65:**
only use **in pressureless medium**.

Ensure that the temperature probe (2) is completely submerged in the medium because otherwise, greater switching point deviations will occur.

For connection types 20, 21 and 22, the temperature probe is fixed in the sheath with the clamping piece (1).

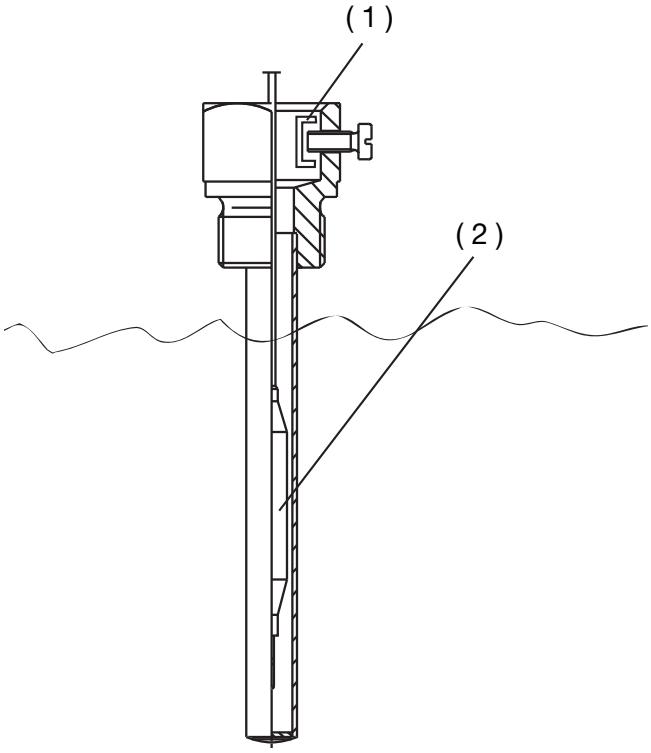

4.1 Standards and information

- Only allow electricians to carry out the electrical connection.
- The choice of cable, the installation and the electrical connection of the device must conform to the requirements of VDE 0100 "Regulations on the Installation of Power Circuits with Nominal Voltages below 1000 V" and/or the appropriate local regulations.
- If contact with live parts is possible while working on the device, it must be completely isolated from the supply.
- Earth the device at the PE terminal to the protective earth conductor. Ensure that this line has at least a cross section identical to that of the supply lines. Earth/ground cables must be routed in a star configuration to a common earthing point that is connected to the protective earth of the supply installation. Do not loop earth cables, i.e. do not run them from one device to another.
- In addition to a faulty installation, also incorrectly set values on the thermostat could impair the orderly function of the following process or lead to other damage. Restrict the setting to expert personnel. Please adhere to the safety regulations for this case.

4.2 Electrical connection

- Terminals and connections are suitable for internal wires
- The connection is suitable for stationary line
- Line insertion without strain relief
- The device corresponds to protection class I.

Capillary tube without protective earth function!

For the probe and the capillary line, the user is
responsible for the required protection against electrical shock.

4 Installation

Plug-in connector
(as standard)

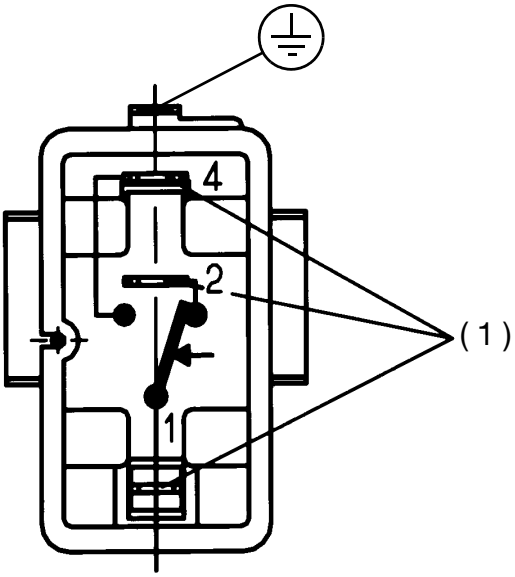

(1) = Tab connector DIN 46 244-A 6.3 x 0.8

Screw-connection
(extra code 699)

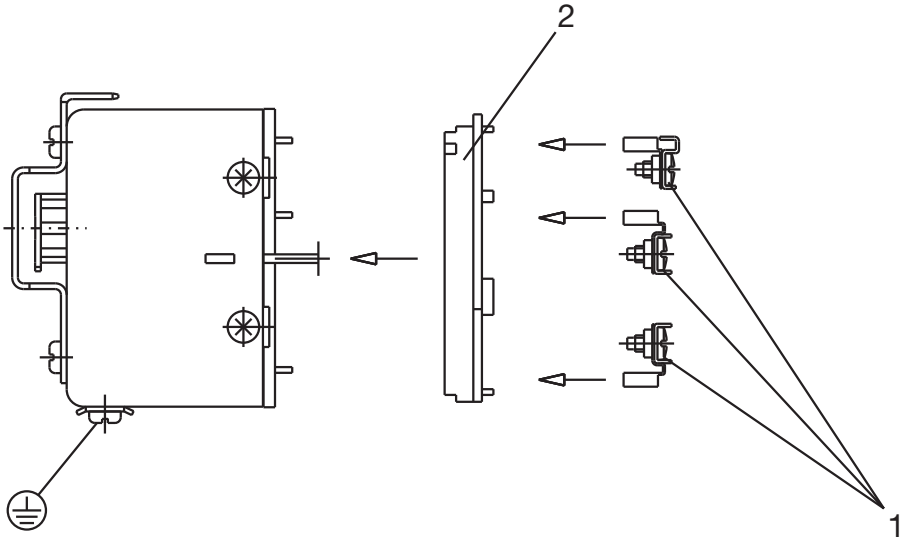

(1) Plug-in sleeve 6.3 with connection screw suitable for wires up to 2.5 mm^2; fitting type "699", without auxiliary means

(2) Terminal strip

4.3 Wiring diagrams

EM-20-E EM-30-E 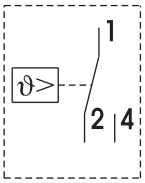	EM-80 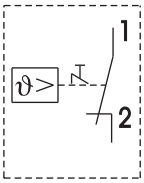	EM-80/574 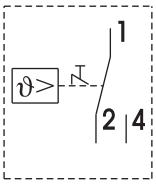

5.1 Unlocking the safety temperature limiter (STB)

EM-80,
with fastening bridge
704, 705, 706

Once the set limit value is gone below (dangerous temperature) by approx. 10% of the scale range, the micro switch can be unlocked.

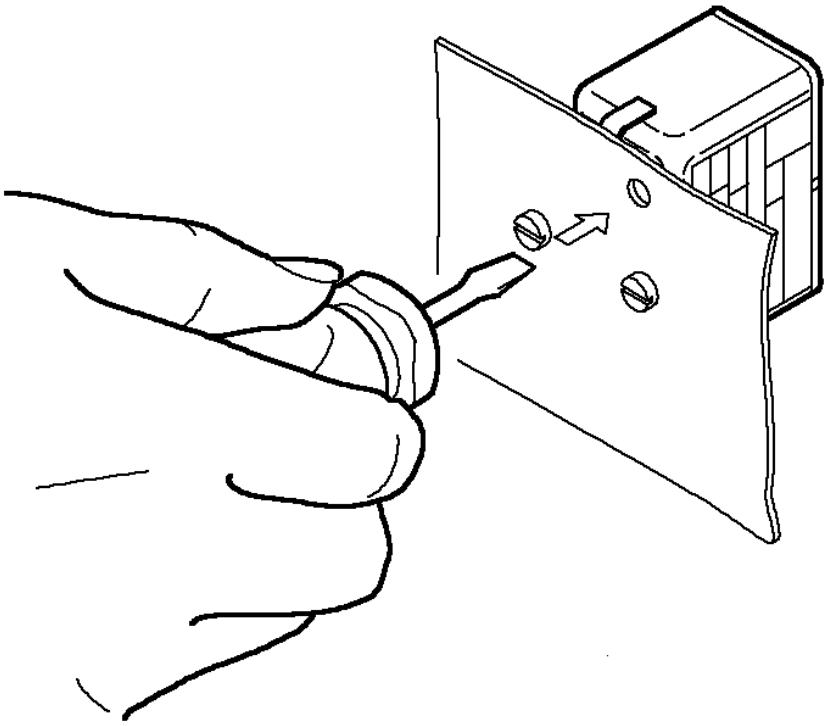

✱ Actuate the restart knob using a small screwdriver.

EM-80
with central fastening as standard

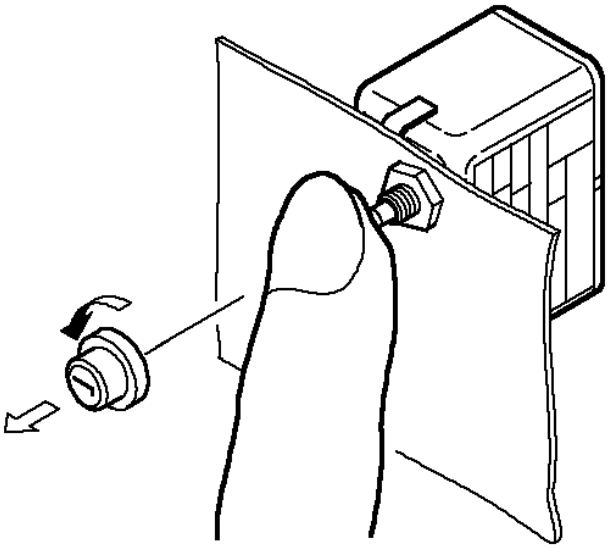

✱ Unscrew the cap

✱ Press the restart knob

✱ Screw on the cap again

5.2 Limit value setting

EM-20-E

(1) Set point value setter
(2) Scale subdivision
(3) Set point value indicator

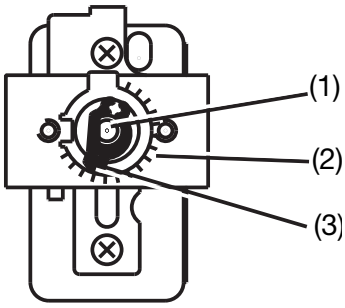

✱ Adjust the set point value setter via the internal scale using a screwdriver

EM-30-E
EM-80

The limit value is permanently factory set and sealed. Readjustment is **not** admissible.

5.3 Self-monitoring of the STB and STW (STB)

If the measuring system is destroyed, i.e. if the expansion fluid emerges, the pressure in the diaphragm drops and permanently opens the current circuit. Unlocking is **no** longer possible.

If the probe has cooled down to a temperature below approx. -20 °C, the current circuit is also opened, however, automatically closes again, when the temperature rises above -10 °C.

5.4 Use of the STW (STB) as STB

The restart lock required as per DIN EN 14597 must be ensured by the following switching diagram. This switching diagram must comply with VDE 0116.

6.1 Technical data

Permissible ambient temperature

	Capillary		Switch head		with scale limit value / limit value
	STW (STB) STB	STW (STB) STB **extra code** 707	STW (STB) STB	STW (STB) STB **extra code** 707	
max.	see nameplate				
min.	-20 °C	-40 °C	+18 °C	0 °C	< 200 °C
		-20 °C			≥ 200 °C ≤ 350 °C
		-40 °C			> 350 °C ≤ 500 °C

Permissible probe temperature

max.: Scale limit value / limit value +15%,
(with scale limit value between +90 °C and 120 °C = min. 25 K

min. -35 °C

Permissible storage temperature

max. +50 °C, min. -50 °C

Case

Sheet steel, galvanized

Switching element

Type	Description
	1 1-pin snap switch
EM-20-E, EM-30-E	with change-over contact
EM-80	with N/C contact
EM-80/574	as N/C contact with additional signal contact

maximum contact rating

Type	Current		Voltage
	Terminal 2	Terminal 4	
EM-20-E EM-30-E	10(2) A	2(0.4) A	AC 230 V +10% cos φ = 1 (0.6)
	0.25 A	0.25 A	DC 230 V +10%
EM-80	10(2) A	- -	AC 230 V +10% cos φ = 1 (0.6)
	0.25 A		DC 230 V +10%
	0.1 A (extra code "702")		AC / DC 24 V
EM-80/574	10(2) A	2(0.4) A	AC 230 V +10% cos φ = 1 (0.6)
	0.25 A	0.25 A	DC 230 V +10%

Contact reliability:

To ensure high switching reliability, we recommend a minimum load of:

- AC/DC 24 V, 100 mA with silver contacts (standard)
- AC/DC 10 V, 5 mA with gold-plated contacts (extra code "702")

Rating surge voltage:

2500 V (via the switching contacts 400 V)
Over-voltage category II

Required fuse rating:

see maximum switching current

Switching point accuracy

(in % from the scale range; referring to the set point or limit value at T_U +22 °C, with increasing temperature)

Type	Hysteresis in %		Switching point accuracy in %	
	fluid-filled	gas-filled	in the upper third of the scale or limit value	at the scale beginning
EM-30-E, EM-80	7 - -	7 - -	+0 / -8	- -
EM-20-E	7	10	+0 / -8	+ 0 / - 10

Protection class

EN 60 529 - IP 00
Degree of soiling 2

Operating medium

Water, oil, air, hot steam

Time constant $t_{0.632}$

in water	in oil	in air / hot steam
≤ 45 s	≤ 60 s	≤ 120 s

Function

as per EN 60 730-1 and DIN EN 60 730-2-9 and DIN EN 14597

STW(STB): 2 BKLNP

STB 2 BFHKLNPV

Rated position

any

Weight

approx. 0.2 kg

Material of capillary and probe

Scale limit value	Capillary	Sensors
up to +200 °C	Copper mat.No.: Cu-DHP Ø 1.5 mm	Copper, mat.No.: Cu-DHP hard soldered
up to +350 °C	Copper mat.No.: Cu-DHP Ø 1.5 mm	Stainless steel, mat.No.: 1.4571 hard soldered
up to +500 °C	Stainless steel, Ø 1.5 mm	Stainless steel, mat.No.: 1.4571 welded
against surcharge		
up to +350 °C	Stainless steel, Ø 1.5 mm	Stainless steel, mat.No.: 1.4571 welded

minimum bending radius of the capillaries

5 mm

Average ambient temperature influence

(in % from the scale range) referring to the limit value.

When the ambient temperature on the switch head and / or the capillary deviates from the calibration ambient temperature +22 °C, a switching point offset occurs.

Higher ambient temperature = lower switching point
Lower ambient temperature = higher switching point

For temperatures with scale limit value / limit value:		
< +200 °C	≥ +200 °C ≤ +350 °C	≥ +400 °C ≤ +500 °C
STW (STB)		
Hysteresis in %		
7	7	10
Ambient temperature influence on the switch head in %/K		
0.43	0.35	0.24
Ambient temperature influence on the capillary in %/m		
0.09 · K · m	0.07 · K · m	0.05 · K · m
STB		
Ambient temperature influence on the switch head: 0.35 K/K		
Ambient temperature influence on the capillary in K/m 0.07 K/K·m		

Temperature compensation "707"

For detailed information, please refer to the graphical presentation in data sheet 602026

JUMO GmbH & Co. KG
Moritz-Juchheim-Straße 1
36039 Fulda, Germany

Telefon: +49 661 6003 - 0
E-Mail: mail@jumo.net
Internet: www.jumo.net

EG Konformitätserklärung

EC Declaration of Conformity / Déclaration CE de conformité

Dokument-Nr. *Document No. / Document n°*	CE 203	
Hersteller *Manufacturer / Etabli par*	JUMO GmbH & Co. KG	
Anschrift *Address / Adresse*	Moritz-Juchheim-Straße 1, 36039 Fulda	
Produkt *Product / Produit*	Beschreibung	Einbauthermostat
	Typ/ Serie	EM-.. ; EMF-..
	Typenblatt-Nr.	60.2021; 60.2025; 60.2026

Wir erklären in alleiniger Verantwortung, dass das bezeichnete Produkt die Schutzanforderungen der Europäischen Richtlinien erfüllt.
We hereby declare in sole responsibility that the designated product fulfills the safety requirements of the European directives.
Nous déclarons sous notre seule responsabilité que le produit remplit les directives européennes.

Richtlinie *Directive / Directive*			Datum der Erstanbringung des CE-Zeichens auf dem Produkt *Date of first application of the CE mark to the product* *Date de 1ère application du sigle CE sur le produit*
2004/108/EG	[EMV-Richtlinie]		96
2006/95/EG	[Niederspannungs-Richtlinie]		95
97/23/EG	[Druckgeräterichtlinie, Modul B+D]	Kategorie IV	02
90/396/EG	[Gasgeräte-Richtlinie]		96

Angewendete Normen
Standards applied / Normes appliquées

DIN EN 61326-1	Ausgabe: 10.2006
DIN EN 60730-1	Ausgabe: 12.2005
DIN EN 60730-2-9	Ausgabe: 10.2005
DIN EN 14597	Ausgabe: 12.2005
AD 2000 Merkblätter	Ausgabe: 10.2000

Anerkannte Qualitätssicherungssysteme der Produktion
Recognized quality assurance systems used in production / Organisme notifié agréé

nach Richtlinie 94/9/EG Modul D */ Directive 94/9/EC Module D / Directive européenne 94/9/CE module D*
TÜV Hannover, Am TÜV 1, D 30519 Hannover, Germany
Kennnummer 0044, Mitteilungsnummer TÜV 99 ATEX 1454 Q.
Identification No. 0044, Notification No. TÜV 99 ATEX 1454 Q / N° d'identification 0044, N° de signification TÜV 99 Atex 1454 Q

nach Richtlinie 97/23/EG Modul D */ Directive 97/23/EC Module D / Directive européenne 97/23/CE module D*
TÜV Industrie Service GmbH, D 68167 Mannheim, Germany
Kennnummer 0036, Zertifikat-Nr. DGR-0036-QS-179-02
Identification No. 0036, Certificate No. DGR-0036-QS-179-02 / N° d'identification 0036 , N° de certificat DGR-0036-QS-179-02

Aussteller:
Issued by: / Etabli par:

Firma */ Company / Société*
JUMO GmbH & Co. KG, Fulda

Ort, Datum:
Place, date: / Lieu, date:

Fulda, 2009-03-10

Rechtsverbindliche Unterschrift
Legally binding signature
Signature juridiquement valable

Geschäftsbereichsleitung Verkauf und Produktion
Head of Division Sales and Production
Direction du département Ventes et Production

ppa. Günter Bott

JUMO GmbH & Co. KG
Street address:
Moritz-Juchheim-Straße 1
36039 Fulda, Germany
Delivery address:
Mackenrodtstraße 14
36039 Fulda, Germany
Postal address:
36035 Fulda, Germany
Phone: +49 661 6003-0
Fax: +49 661 6003-607
E-mail: mail@jumo.net
Internet: www.jumo.net

JUMO Instrument Co. Ltd.
JUMO House
Temple Bank, Riverway
Harlow - Essex CM20 2DY, UK
Phone: +44 1279 63 55 33
Fax: +44 1279 63 52 62
E-mail: sales@jumo.co.uk
Internet: www.jumo.co.uk

JUMO Process Control, Inc.
6733 Myers Road
East Syracuse, NY 13057, USA
Phone: 315-437-5866
1-800-554-5866
Fax: 315-437-5860
E-mail: info.us@jumo.net
Internet: www.jumousa.com